PROP

1

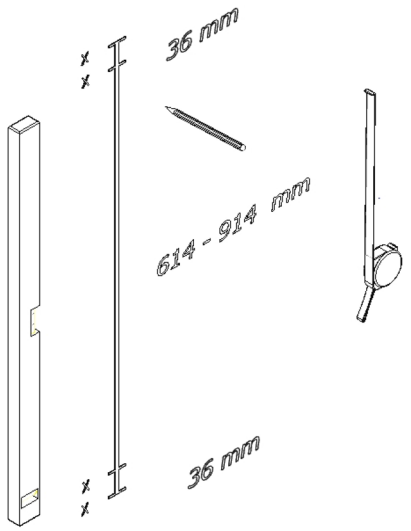

2

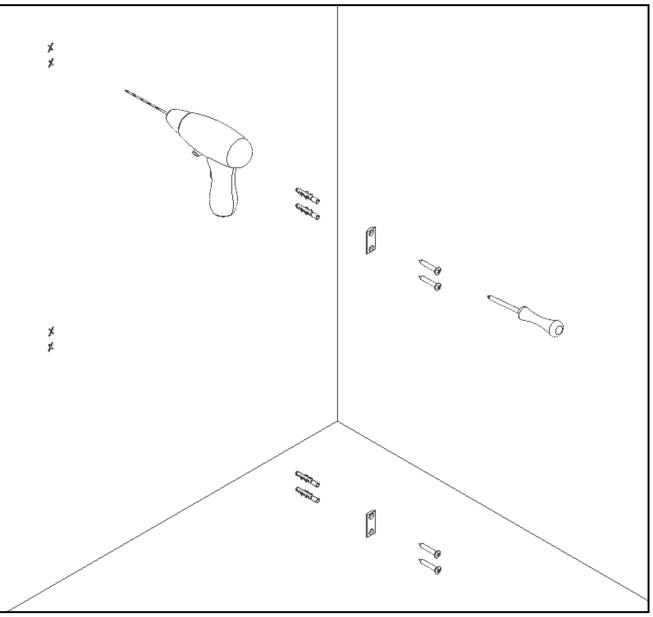

3

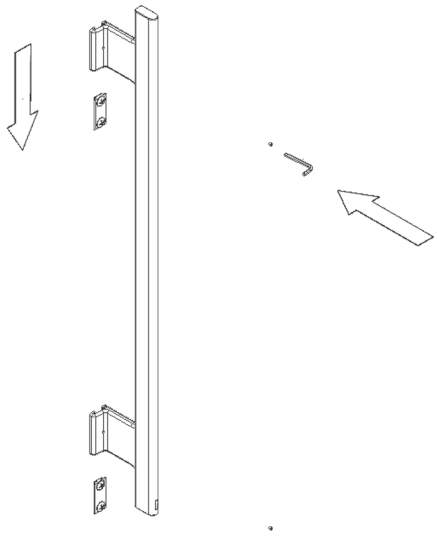

4

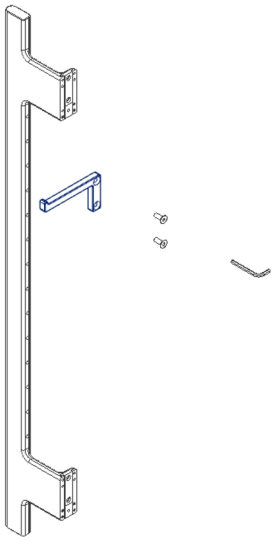

5

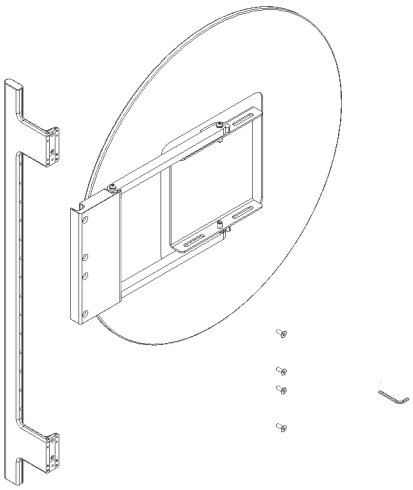

6

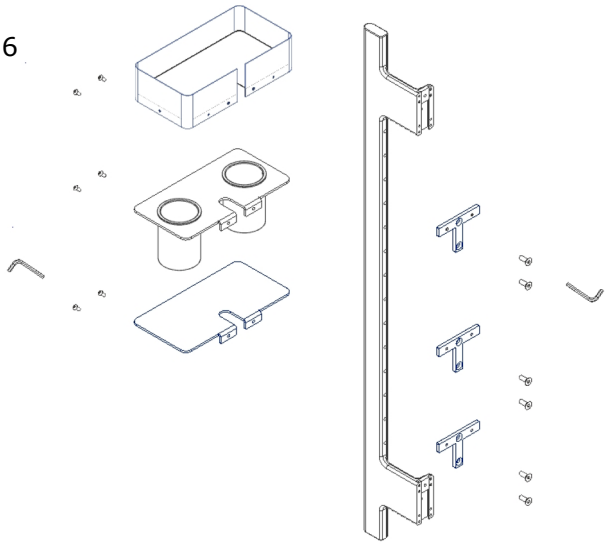

COD.: EVBAA80 - EVBAB80 - EVBAN80 - EVBAA110 - EVBAB110 - EVBAN110 - EVBAAPA - EVBAAPB - EVBAAPN - EVBASRBG - EVBASRBB - EVBASRBN - EVBASTBG - EVBASTBB - EVBASTBN - EVBAMCG - EVBAMCB - EVBAMCN - EVBAMEG - EVBAMEB - EVBAMEN - EVBAMBG- EVBAMBB - EVBAMBN

REV.00 del 13/10/2020 IST-EVBA_EV

THERMOMAT SANILINE SRL
Via M. Curie, 7 – 46034 Borgo Virgilio (Mantova) ITALY
Tel. + 39 0376 44 73 P. Iva 02001770201
www.everlifedesign.it e-mail: info@everlifedesign.it